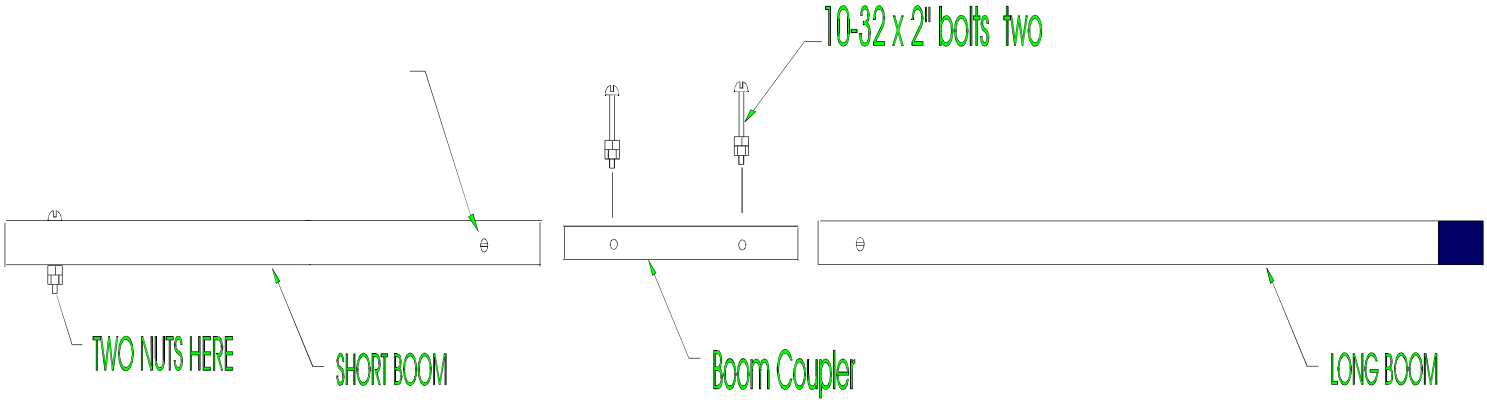

Boom Assembly

8. Assemble boom before connecting to the reflector assembley. For connection to boom on MQ-34SR you will have to release the u"bolts on the insulating board that attach to the boom, to get the boom coupler to fit inside the boom.

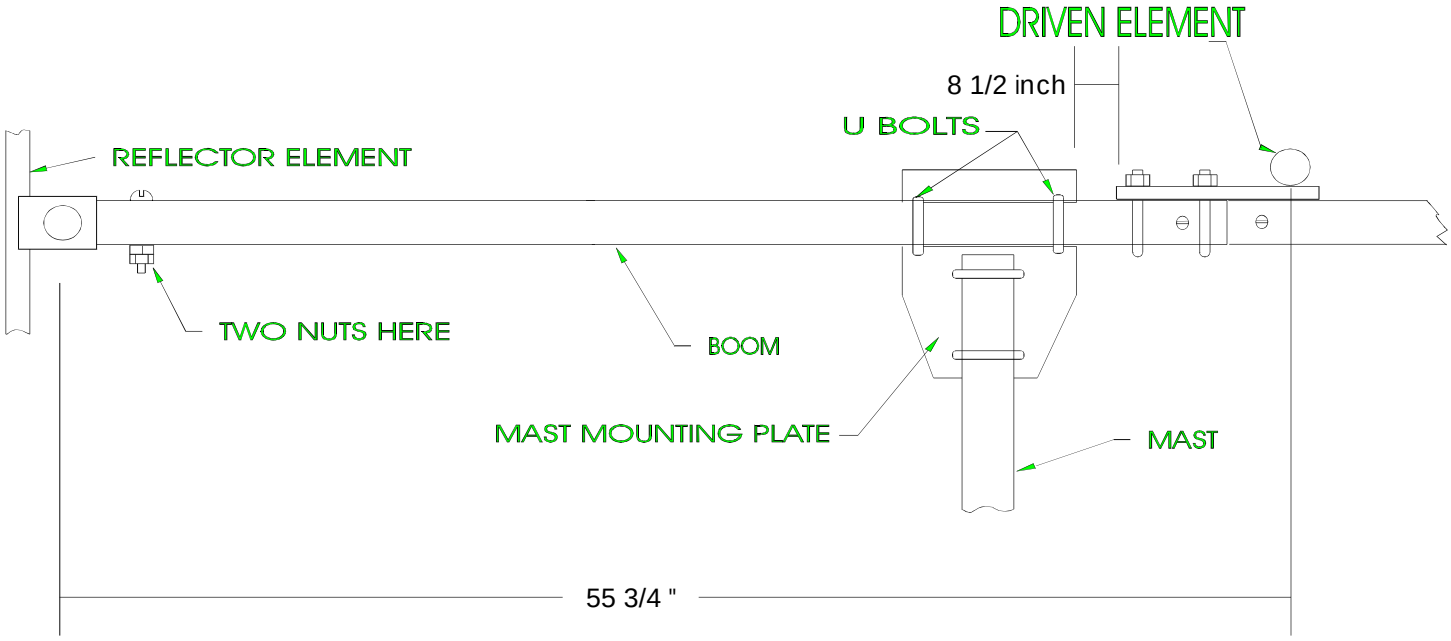

9. Driven Element. Assemble driven elements and insulating dowel with 2" long bolts and nuts as shown in picture below. This is a heavy current point, nuts must be pulled down to ensure a good contact.

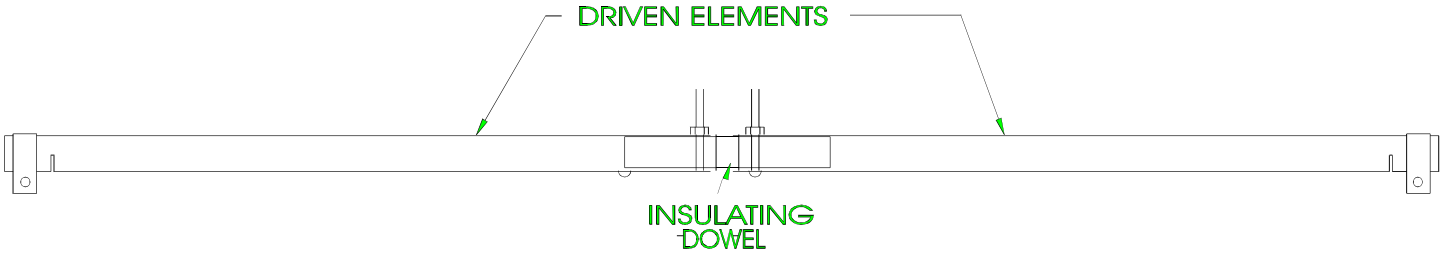

10. Attach driven elements to insulating board on side opposite boom; secure with "U" bolts, nuts and washer. Counter bored holes in board provide clearance for driven element bolt heads. Assemble washer, lugs and nuts to driven element screws . Refer to picture below.

Note: Only tighten U'Bolts until insulating board begins to bend.

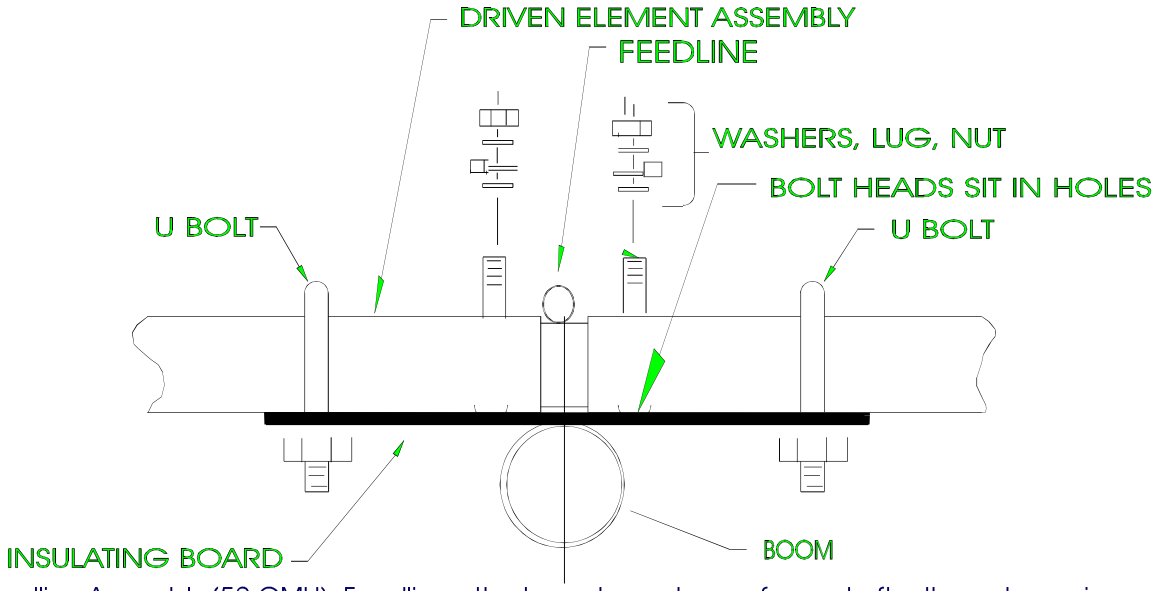

11. Feedline Assembly (52 OMH). Feedline attachment may be performed after the antenna is completely assembled, but it is more convenient if attached at this point of assembly. Crimp and solder the leads of the transmission line to the two solder lugs on the driven element screw. Check to make certain there is no possibility that either the braid or the center conductor will short out to the boom. Tape feedline to top of boom as shown in picture for step 6.
Note: The anntenna will work fine with direct feed, however, to eliminate skewing and for the best front to back a 1:1 50 ohm balun is recommended.
If a balun is used it should be located close to the antenna terminals as shown and connecting leads made as short as possible.

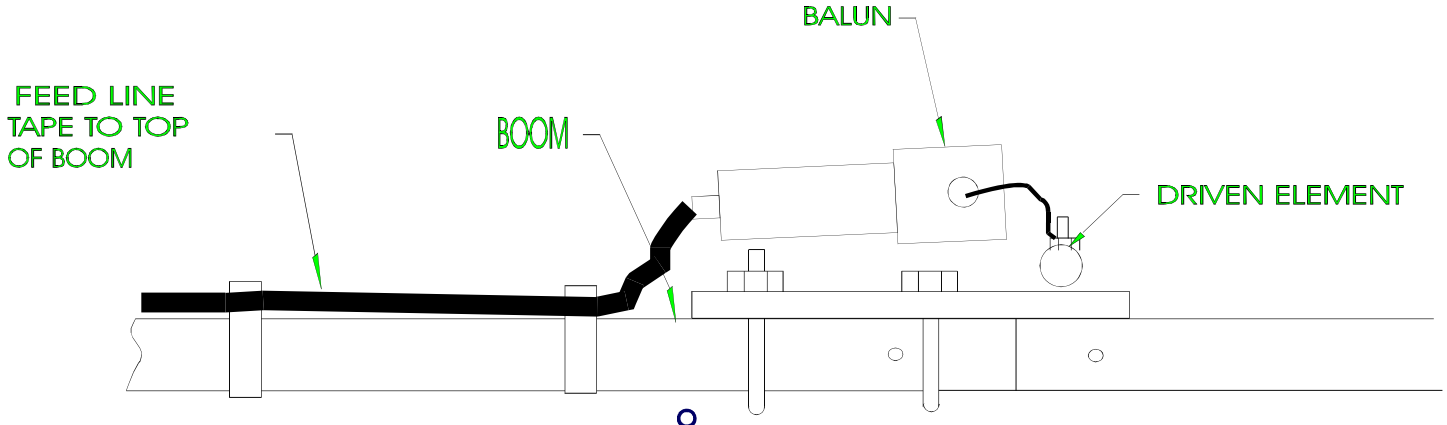

12. Director Element. Assemble director element by sliding 1" tubes into the center 1 1/8" tube.

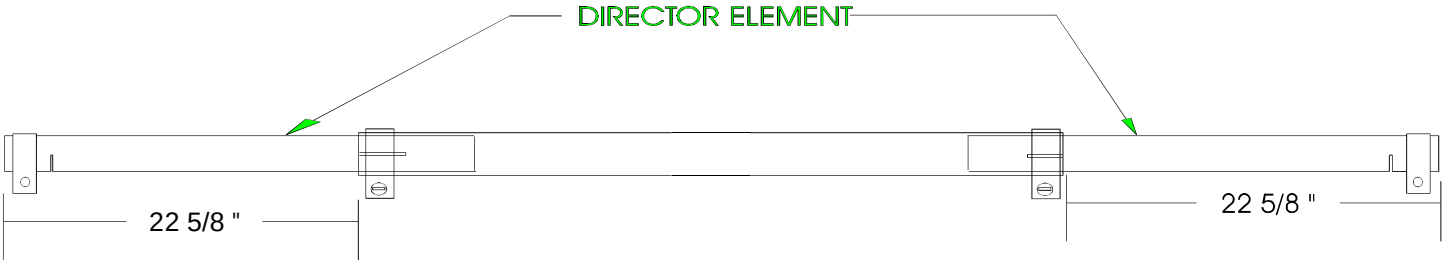

13. Attach director elements to insulating board on side opposite boom; secure with "U" bolts, nuts and washer.

Note: Only tighten U'Bolts until insulating board begins to bend.

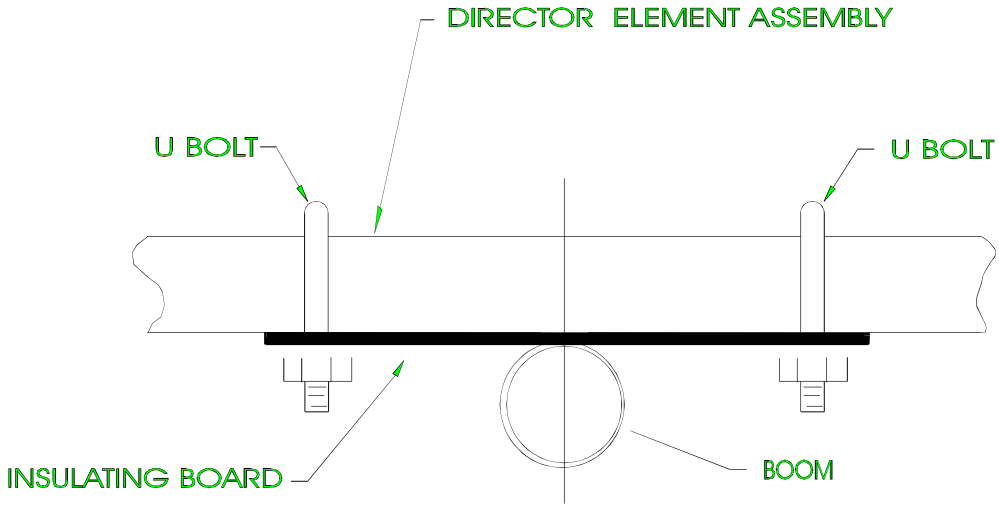

14. Only tighten u' bolts untill insulating board begins to bend.

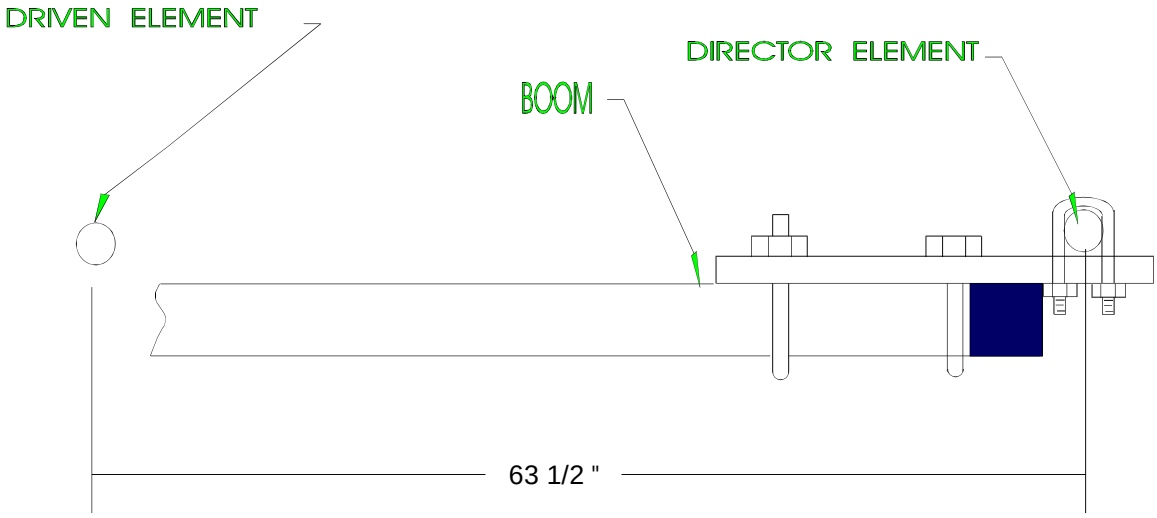

Adjustable Tuning Spokes

This antenna has adjustable tuning spokes included with it to make tuning easier. By loosening the top 4-40 screw the spoke can be lengthen by up to 1 5/16 of an inch longer thereby lowering the frequency. If you need to raise the frequency push the spoke back into the adjuster , if the spoke is already all the way in the adjuster you will be required to cut the spoke shorter according to the chart in this manual. A large pair of pliers with the cutter on the side will shear the spoke off squarely , but you will still be required to file the burrs off , so the spoke will fit back into the adjuster.

These adjustable tuning spokes can be placed along the buss bar on the same side of all four loading coils to make them easy to locate.

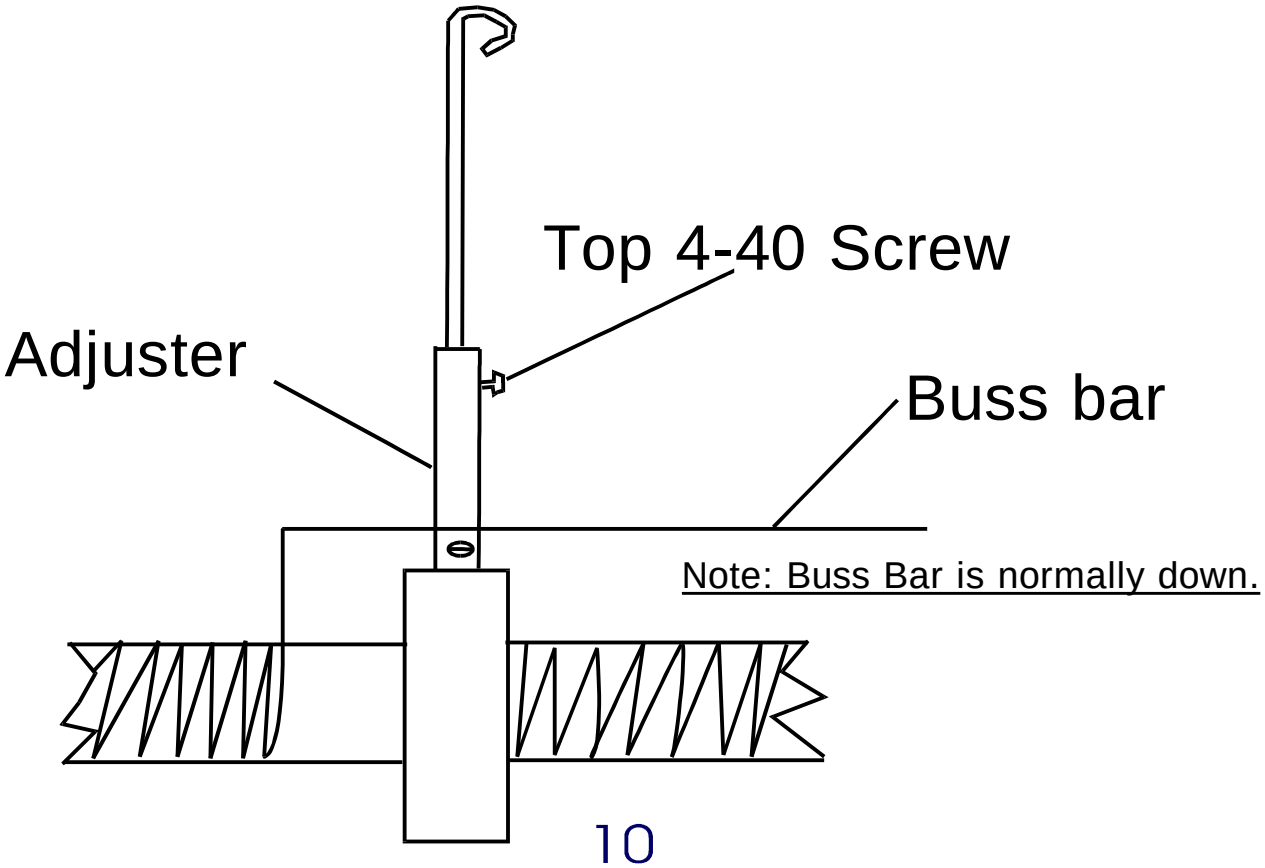

15. Assemble reflector element to boom and align with driven element. Fasten plastic cross arm bracket to boom with the 2 inch #10 bolts and nuts provided. Place two nuts as shown below to insure reliability. The first nut should be tightened securely before the second nut is tightened down. Mast mounting plate should be assembled and installed against the insulating board of the driven element. as shown.

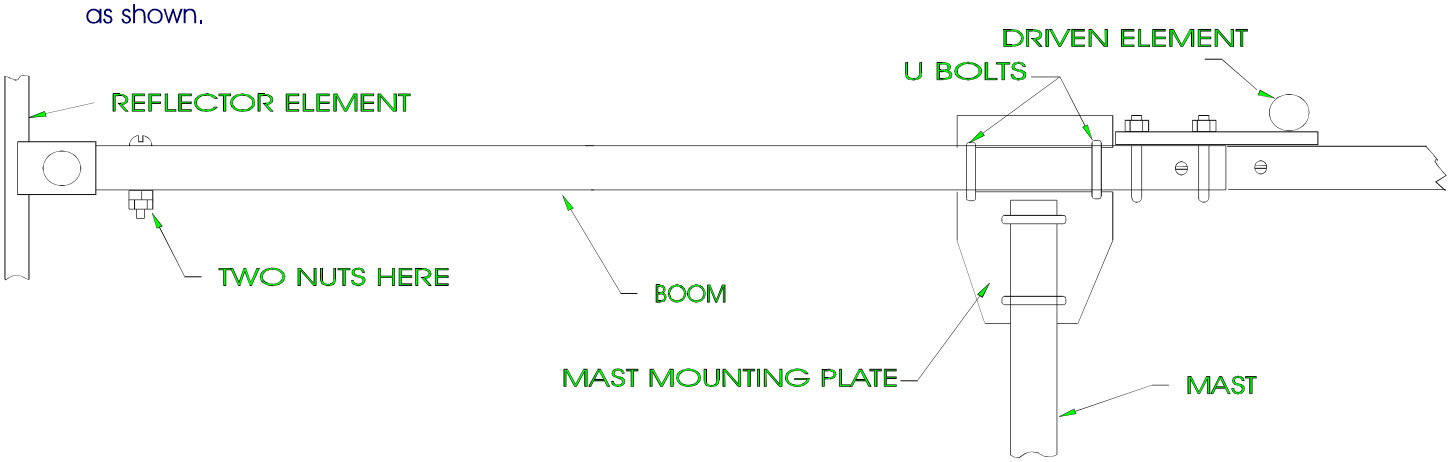

THIS COMPLETES THE HARDWARE ASSEMBLY OF YOUR ANTENNA

16. Coil Assembly and Frequency Adjustments for 10, 15, and 20 Meters.

The drawing below shows one reflector coil and one driven coil. Also shown is the spoke distribution and the various rings which affect operating frequencies for 10, 15, and 20 meter sections.

1. Spoke length is measured from the the top of the bend to the tip of the spoke.

2. Radial position of longer or shorter spokes in the rings is not critical.

3. Avoid bending bus bars; straighten if necessary.

4. Normally the spokes in the reflector coils are longer than in the driven coils.

5. To raise ten meters to higher frequency will require shortening one of the regular 6" spokes in each driven coil.

DIRECTOR COIL

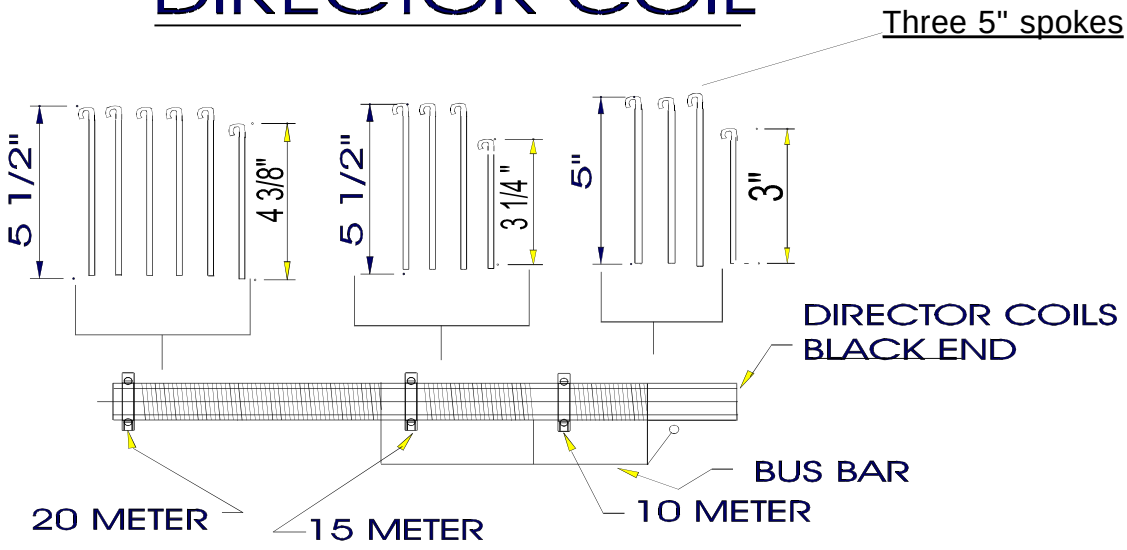

DRIVEN COIL

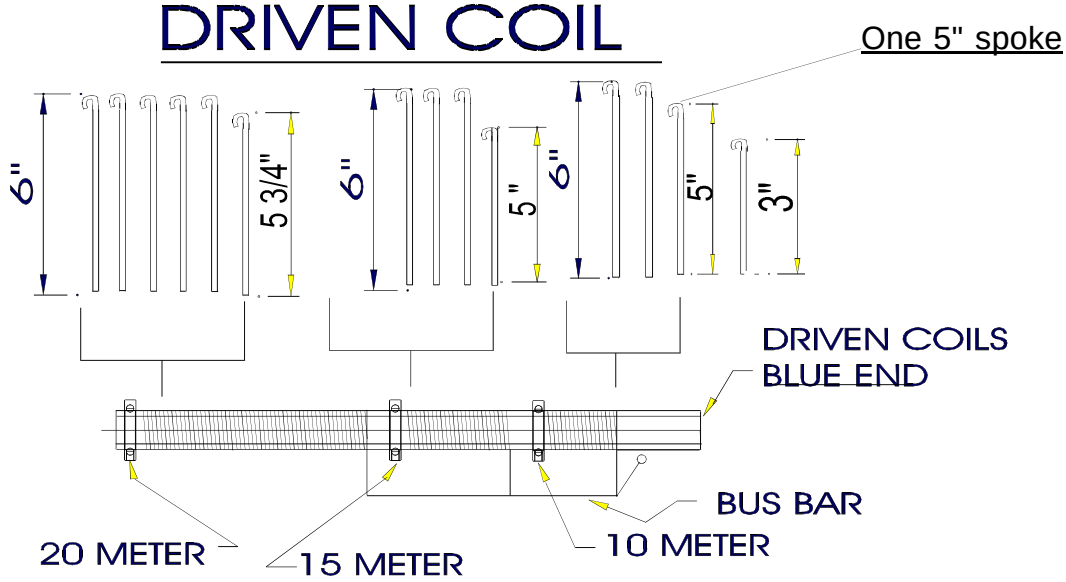

REFLECTOR COIL

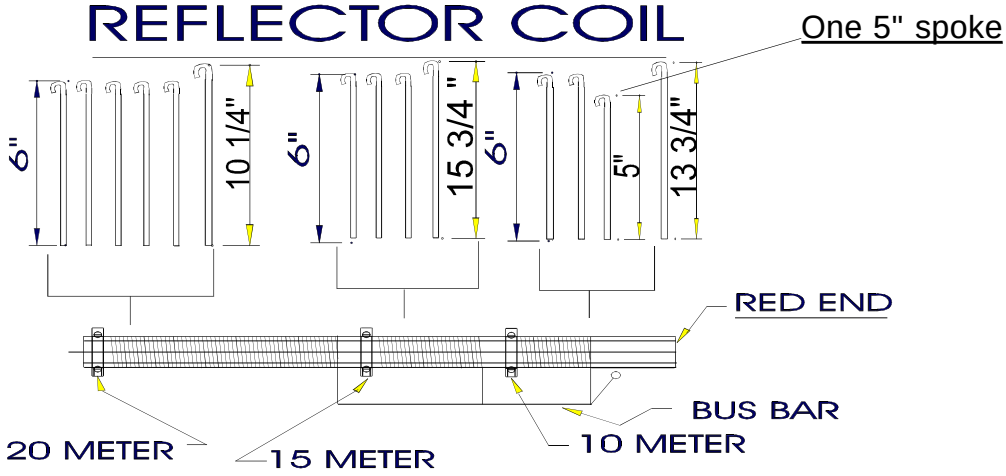

Antenna should be checked and tuned on the ground

It is recommended to prepare a ground level mast that will permit easy initial testing and adjustment with antenna at about six feet above the ground. The balun should be installed and if possible the coaxial cable you are going to use. The SWR can be measured by using a transmitter and SWR bridge or an SWR Analyzer. Always start tuning the antenna from the the lowest frequency to the highest frequency It is recommended to resonate each frequency appoximately 20 KHZ below the desired operating frequency.

The Model MQ-34SR is factory resonated near the low frequency end of each band. Antenna as received from factory and using spokes as supplied resonates at approximately 50 KHz of the following frequencies: 10 Meter Band - 28.550 MHz Approx.
15 Meter Band - 21.250 MHz Approx.
20 Meter Band - 14.200 MHz Approx.

For those who wish to operate higher into the phone band or into the single side band portion, the frequency of the 10, 15, and 20 meter bands may be indepently increased by changing the length of one spoke in each driven coil on any or all bands which you wish to change. The table below indicates the amount of frequency change in each band by removing 1/2' of spoke length from one spoke from each driven coil for that particular band.

Adjustment of one band does not affect the resonant frequency of other bands as is sometimes the case with other multi-band antennas.

Bands	Effect of adding or removing 1/2" from one spoke for each coil
10 Meters	Increases 250 KHz
15 Meters	Increases 150 KHz
20 Meters	Increases 100 KHz

The values for removal of 1/2" spoke length shown in the table are to be considered typical. The relationship is basically linear ie., if 1/4" is removed the frequency increase is about one half the value shown in the table and if 1" is removed the frequency increase is twice the value shown in the table.

Example: You wish to raise the frequency of the 20 meter section by 100 KHz. Choose one spoke from each 20 meter ring, remove 1/2" from each spoke, return the shortened spokes to the 20 meter rings, one shortened spoke per ring.

Note: Remember, the adjustment is made on one spoke from each driven coil for that band you wish to change. All shortened spokes should have the rounded end left on to prevent corona . The position of the shortened spoke in its respective ring is not critical.
Note: Only the driven element is tuned.

17. Spoke Installation. Insert the spokes into their respective rings to the bottom of the holes, then tighten the locking screw snugily . Failure to tighten spokes properly will result in irregular antenna operation.

18. Assemble reflector coils (red color end) to reflector element and driven coils (blue color end) to driven element. Eye of coil bus bar is secured to clamps under head of clamp bolt , on ends of the elements.

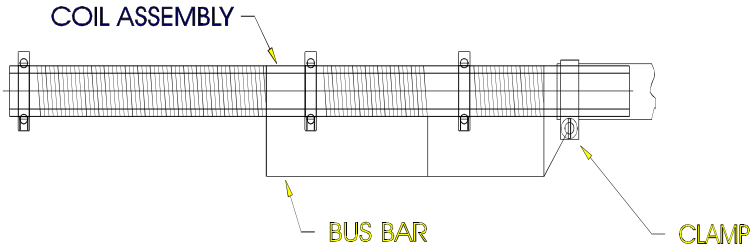

CONGRATULATIONS! YOU'RE FINISHED.

Six Meter Band.

The use of a balun is recommended to improve antenna performace and Front to Back.
Array Solutions makes a balun that covers to 52 MHZ.
Model W1JR-50-3 www.arraysolutions.com

GENERAL NOTES

The general information below is somewhat random in nature and has been included in this special section.

1. If it is desired to decrease the resonant frequency of your antenna, it is only necessary to lengthen spokes. using the extra spokes included with the antenna.
   Longer spokes are available from the factory or 1/8 aluminum welding rod works fine.

2. The Model MQ-34SR is intended for mounting with an 1 3/4 to 2 1/8' OD mast (not included). A heavy duty TV type rotor is normally adequate for rotation in a tower mount with thrust bearing. For use without a thrust bearing a medium duty rotor is recommended.

3. When operating the MQ-34SR, the input power to the final must be limited to 1200 watts P.E.P. During tune-up and when operating in the key down or CW mode, dc input must be limited to 500 watts and 40% duty cycle.

4. Replacement or spare parts are available if required. Address requests for information to your dealer or :

T. G. M. Communications
Tom McKay VE3 KVD
121 Devon St.
Stratford Ont.
N5A 2Z8 Tel-(1-519-271-5928)
E-mail tgmc@sympatico.ca

SWR vs FREQUENCY FOR MODEL MQ-34SR

20 METERS

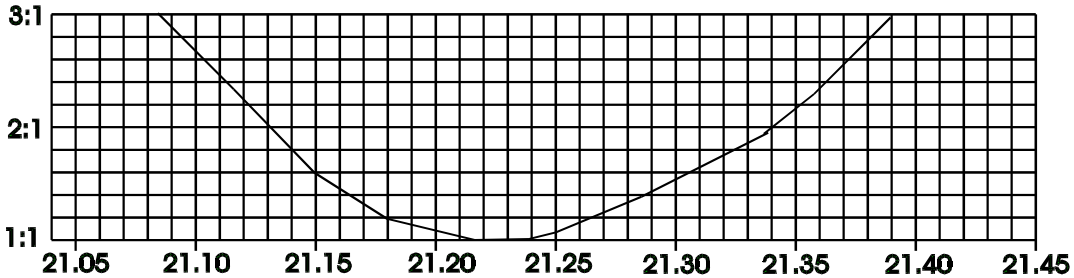

15 METERS

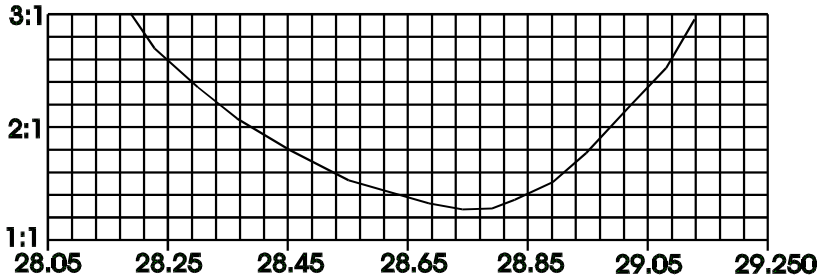

10 METERS

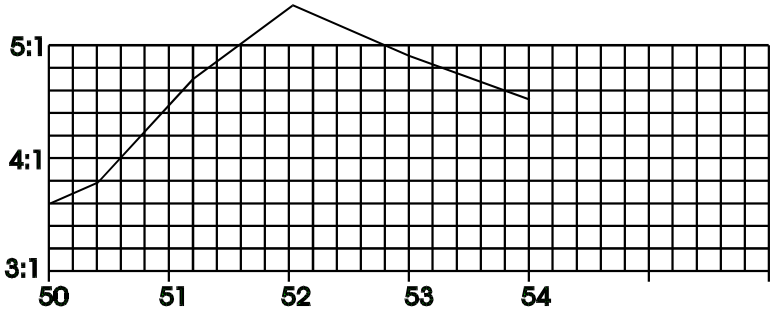

6 METERS

NOTE: Above curves typical -Resonance may be adjusted up or down.